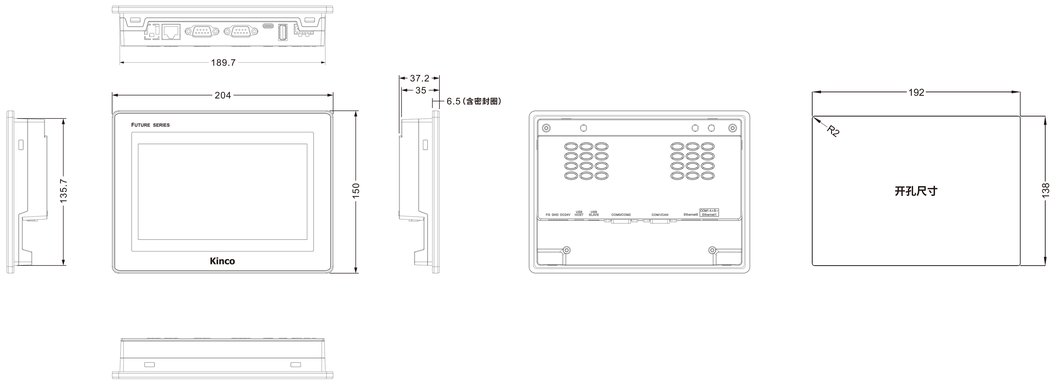
189.7
204
FUTURE SERIES
Kinco
135.7
150
37.2
35
6.5（含密封圈）
192
R2
开孔尺寸
138

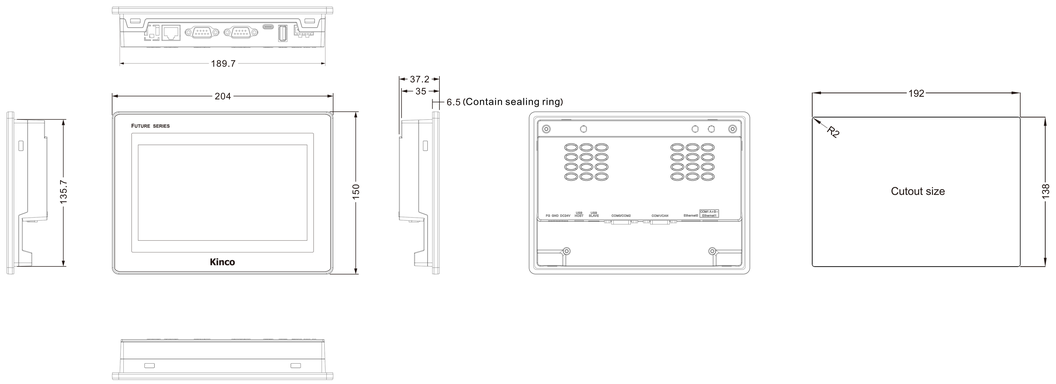
189.7
204
FUTURE SERIES
Kinco
135.7
150
37.2
35
6.5 (Contain sealing ring)
192
R2
Cutout size
138